PHYS 241: Signal Processing

William Homier[1]

[1] *McGill University Physics, 3600 Rue University, Montréal, QC H3A 2T8, Canada*

January 6th, 2026

Abstract

Contents

1 Introduction **1**

2 Foundations **1**
2.1 Waves . . . 1
2.1.1 Properties of Waves . . . 1
2.1.2 Waveforms . . . 1
2.2 Linear Systems . . . 2

3 Electromagnetic Theory **3**
3.1 Electric Charge . . . 3
3.2 Electric Field . . . 3
3.3 Electric Potential . . . 3
3.4 Electric Potential Energy . . . 4
3.5 Magnetic Field . . . 4
3.6 Magnetic Flux . . . 5
3.7 Electromagnetic Induction . . . 5
3.7.1 Faraday's Law . . . 5
3.7.2 Lenz's Law . . . 5
3.7.3 Mutual Inductance . . . 6

4 Circuit Fundamentals **6**
4.1 Current and Voltage . . . 6
4.2 Electromotive Force . . . 7
4.3 Ohm's Law . . . 7
4.4 Kirchhoff's Laws . . . 8
4.5 Direct and Alternating Current . . . 9
4.6 Static Circuits . . . 9
4.7 Circuit Classification . . . 10

5 Circuit Components **10**
5.1 Resistors . . . 10
5.1.1 Temperature Dependence . . . 11
5.1.2 Power Dissipation . . . 11
5.2 Batteries . . . 11
5.3 Ground and Reference . . . 12
5.4 Capacitors . . . 12
5.4.1 Dielectric Insulator . . . 13
5.4.2 Energy Stored in a Capacitor . . . 13
5.4.3 Charging a Capacitor . . . 13
5.5 Inductors . . . 13
5.5.1 Energy Storage . . . 14
5.5.2 Networks of Inductors . . . 15
5.5.3 Solenoid . . . 15
5.6 Transformers & Mutual Inductance (Not Tested) . . . 16

6 Circuit Analysis **17**
6.1 RC Circuit . . . 17
6.1.1 DC Analysis . . . 17
6.2 RC Circuit with AC Driving . . . 18
6.2.1 Driving Frequency and Time Constant . . . 18
6.2.2 RC Circuit with Square-Wave Input . . . 19
6.2.3 Integrator and Differentiator Behaviour . . . 19
6.3 LR Circuit . . . 20
6.3.1 DC Analysis . . . 20
6.4 LR Circuit with AC Driving . . . 21
6.4.1 Driving Frequency and Time Constant . . . 21
6.4.2 LR Circuit with Square-Wave Input . . . 21
6.4.3 Integrator and Differentiator Behaviour . . . 22
6.5 Frequency Behaviour Summary . . . 22

7 Phasors and Complex Impedance **22**
7.1 Complex Representation of AC Signals . . . 22
7.2 Working with Complex Signals . . . 23
7.3 Capacitor Current . . . 23
7.4 Impedance of a Capacitor . . . 23
7.5 Impedance . . . 24
7.6 Phase Intuition . . . 24
7.7 Power Dissipation of AC Signals . . . 24
7.8 Adding Impedances . . . 25
7.9 Sinusoidally Driven RC Circuit . . . 25
7.10 Impedance Divider . . . 26
7.11 Filter Examples . . . 26

8 RLC Circuits **29**
8.1 Charging with a Step Voltage . . . 29
8.2 Solution by Characteristic Equation . . . 30
8.3 Damping Cases . . . 30
8.4 RLC Circuit with AC Driving . . . 31
8.4.1 Amplitude . . . 32
8.4.2 Phase . . . 32
8.5 Quality Factor . . . 32
8.6 Power and Resonance . . . 33
8.7 Capacitor Voltage in a Driven RLC Circuit . . . 33
8.7.1 Limiting Behaviour . . . 34
8.8 Quality Factor . . . 34
8.8.1 Derivation for a Series RLC Circuit . . . 34
8.9 Quality Factor and Energy Decay . . . 35
8.10 Power Input into a Driven RLC Series Circuit . . . 35
8.10.1 Steady State . . . 36
8.10.2 Bandwidth and Quality Factor . . . 36

9 Circuit Network Analysis **36**
9.1 Kirchhoff's Laws (Review) 36
9.2 Terminology 36
9.3 Methods of Analysis 37
9.3.1 Branch Method 37
9.3.2 Loop Current Method 37
9.3.3 Nodal Method 37
9.4 Superposition Theorem 38
9.5 Current Sources 38
9.6 Converting Between Source Types 38
9.7 Thévenin's Theorem 38
9.7.1 Determining e and r 39
9.8 Norton's Theorem 39
9.8.1 Equivalence of Thévenin and Norton Representations . . 39

10 IDK where to put the info below **40**

11 Appendix **40**
11.1 Important Concepts 40

12 Useful Links **43**

January 13, 2026

1 Introduction

2 Foundations

2.1 Waves

2.1.1 Properties of Waves

To describe waves, considering a sinusoidal wave of the form $A_p \sin(2\pi\nu t)$, we use the following terms:

- **Peak amplitude** (A_p): maximum value of the wave from its equilibrium position.
- **Peak-to-peak amplitude**: total height of the wave from its maximum to its minimum value (i.e., $2A_p$).
- **Frequency** (ν): number of cycles per second (Hz).
- **Time** (t): time variable.

To describe AC signals effectively, we take the root mean square (RMS) amplitude $\frac{A_p}{\sqrt{2}}$ of values such as current and voltage. This is because the mean value of an AC signal is zero, and the RMS is a more meaningful measure of the signal's amplitude as it gives a positive value that is proportional to the energy in the signal.

$$I_{\text{RMS}} = \frac{I_p}{\sqrt{2}}, \qquad V_{\text{RMS}} = \frac{V_p}{\sqrt{2}}.$$

2.1.2 Waveforms

Definition 1 (Waveform)**.** *A waveform is a graphical representation of how a signal varies over time, and can take various forms such as a sine wave, square wave, triangle wave, or sawtooth wave.*

1. Direct current (DC). A direct current is constant in time, so its graph is a horizontal line.

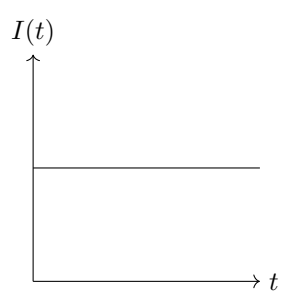

2. Alternating current (AC). An alternating current varies periodically in time and typically oscillates about zero in a sinusoidal pattern.

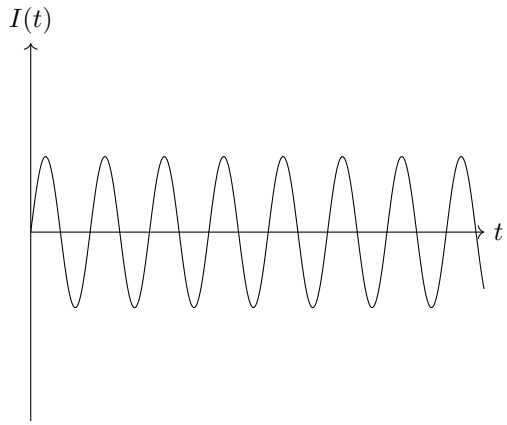

3. Pulsating current (DC + AC). A pulsating current is an alternating current superimposed on a non-zero DC level. This is just a matter of adding a constant DC level to an AC signal so that the signal is either shifted up or down with respect to the zero current level.

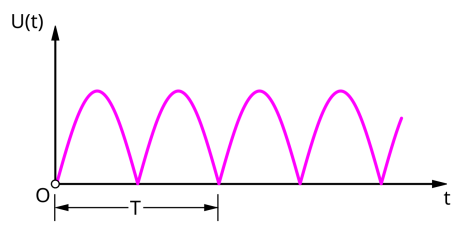

Figure 1: Pulsating direct current diagram.

2.2 Linear Systems

Definition 2 (Linear System)**.** *A system H is linear if it satisfies superposition*

$$H[x_1(t) + x_2(t)] = H[x_1(t)] + H[x_2(t)],$$

and scaling

$$H[\alpha x(t)] = \alpha H[x(t)],$$

for all inputs $x_1(t), x_2(t)$ and constant α.

Example. *Consider two inputs $x_1(t)$ and $x_2(t)$ to a linear system producing outputs $y_1(t) = H[x_1(t)]$ and $y_2(t) = H[x_2(t)]$, where H is some transformation function.*

A linear transformation must satisfy:

$$y_{total} = \alpha y_1(t) + \beta y_2(t) = H[\alpha x_1(t) + \beta x_2(t)],$$

where α and β are constants.

3 Electromagnetic Theory

3.1 Electric Charge

Definition 3. *Charge is a fundamental physical property that comes in two types: positive (+) and negative (–) (which cancel). Opposite charges attract and equal amounts of positive and negative charge cancel, so most matter is electrically neutral. Electric charge is conserved, meaning it cannot be created or destroyed, only transferred. It is also quantized, existing in discrete multiples of the elementary charge*

$$e = 1.6 \times 10^{-19}\ C,$$

where the coulomb (C) is the SI unit of charge.

3.2 Electric Field

Definition 4 (Electric Field)**.** *The electric field $\vec{E}$ is a vector field produced by electric charges. It describes the force that a charge would experience at any point in space. Quantitatively, the electric field at a point is defined as the force $\vec{F}$ acting on a small positive test charge q placed at that point, divided by the magnitude of the charge:*

$$\vec{E} = \frac{\vec{F}}{q}.$$

The direction of $\vec{E}$ is the direction of the force on a positive test charge. Its SI units are newtons per coulomb (N/C), which are equivalent to volts per meter (V/m).

3.3 Electric Potential

Definition 5 (Electric Potential)**.** *The electric potential $V(\vec{r})$ at a point is the electric potential energy per unit charge:*

$$V = \frac{U}{q}.$$

It is a scalar quantity with units of volts (V) that represents the work done per unit charge to move a positive test charge from a reference point (often taken at infinity) to the point $\vec{r}$, without changing its kinetic energy. It is defined relative to a reference point $\vec{r}_0$ by

$$V(\vec{r}) - V(\vec{r}_0) = -\int_{\vec{r}_0}^{\vec{r}} \vec{E} \cdot d\vec{l},$$

where $\vec{E}$ is the electric field. The electric field is related to the potential by

$$\vec{E} = -\nabla V.$$

Example (Uniform Electric Field)**.** *If $\vec{E}$ is uniform, the potential difference between two points separated by $\vec{d}$ is*

$$\Delta V = -\vec{E} \cdot \vec{d}.$$

3.4 Electric Potential Energy

Definition 6 (Electric Potential Energy)**.** *Electric potential energy U is the energy a charge possesses due to its position in an electric field. For a charge q at a point where the electric potential is V, the potential energy is*

$$U = qV,$$

and is measured in joules (J). Since electric potential is defined relative to a reference point, the potential energy is also defined relative to that same reference.

An electron placed between two charged plates experiences a potential difference ΔV. The change in its electric potential energy is

$$\Delta U = q\,\Delta V.$$

If the electron is allowed to move freely, this change in electric potential energy is converted into kinetic energy:

$$\Delta K = -\Delta U.$$

3.5 Magnetic Field

Definition 7 (Magnetic Field)**.** *A magnetic field $\vec{B}$ is a vector field produced by moving electric charges (currents) and intrinsic magnetic moments of particles. It exerts a force on moving charges given by the Lorentz force law:*

$$\vec{F} = q(\vec{v} \times \vec{B}),$$

where q is the charge and $\vec{v}$ is its velocity. The force is perpendicular to both the velocity and the magnetic field. Unlike electric fields, which act on charges whether stationary or moving, magnetic fields act only on moving charges. For a long straight current-carrying wire, the magnitude of the magnetic field at a distance r is

$$B = \frac{\mu_0 I}{2\pi r},$$

where μ_0 is the permeability of free space[1] *and I is the current. The SI unit of magnetic field is the tesla (T).*

[1] The permeability of free space is $\mu_0 = 4\pi \times 10^{-7}\ \mathrm{T \cdot m/A}$.

3.6 Magnetic Flux

Definition 8 (Magnetic Flux)**.** *Magnetic flux Φ_B through a surface is defined as the surface integral of the magnetic field $\vec{B}$ over that surface:*

$$\Phi_B = \int \vec{B} \cdot d\vec{A},$$

where $d\vec{A}$ is an infinitesimal area element of the surface, and the dot product accounts for the angle between the magnetic field and the normal to the surface. The SI unit of magnetic flux is the weber (Wb).

January 22, 2026

3.7 Electromagnetic Induction

3.7.1 Faraday's Law

Theorem 1 (Faraday's Law)**.** *Faraday's Law states that a changing magnetic flux through a closed loop induces an electromotive force (EMF) in the loop:*

$$\mathcal{E}_{EMF} = -\frac{d\Phi_B}{dt},$$

where $\mathcal{E}_{EMF}$ is the induced EMF and Φ_B is the magnetic flux through a wire loop. The negative sign indicates that the induced EMF creates a current whose magnetic field opposes the change in flux, as described by Lenz's Law.

3.7.2 Lenz's Law

Law 1 (Lenz's Law)**.** *The induced current in a circuit flows in a direction such that the magnetic field it produces opposes the change in magnetic flux that generated it.*

Consider any closed conducting loop. If the magnetic flux through the loop increases, the induced current produces a magnetic field that opposes the increase. If the flux decreases, the induced current produces a field that tends to restore it.

When the magnetic flux is increasing, the induced current is directed opposite to the orientation predicted by the right-hand rule for the increasing field. When the flux is decreasing, the induced current follows the orientation that attempts to reinforce the original field.

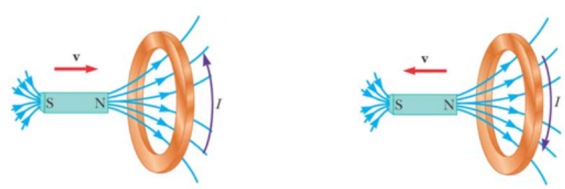

Figure 2: Direction of the induced current according to Lenz's Law.

3.7.3 Mutual Inductance

Definition 9 (Mutual Inductance)**.** *Mutual inductance is the property of two nearby circuits whereby a time-varying current in one coil induces an electromotive force (EMF) in another through magnetic flux linkage.*

If a current $I_1(t)$ flows in the primary coil, it produces a magnetic flux Φ_{21} through the secondary coil. According to Faraday's law,

$$\mathcal{E}_2 = -\frac{d\Phi_{21}}{dt}.$$

The mutual inductance M is defined by

$$\Phi_{21} = MI_1,$$

which gives

$$\mathcal{E}_2 = -M\frac{dI_1}{dt}.$$

The value of M depends on the number of turns in each coil, their geometry, their separation, and the magnetic permeability of the material between them.

4 Circuit Fundamentals

4.1 Current and Voltage

Definition 10 (Electric Current)**.** *Electric current is the flow of electrons through a wire driven by an electric field potential energy difference. Defined as the rate of charge past a point in a circuit:*

$$I = \frac{dQ}{dt}, \tag{1}$$

and is measured in amperes (A), where $1\ A = 1\ C/s$.

Definition 11 (Voltage)**.** *The voltage (or electric potential difference) is the difference in potential energy between two points in an electric field.*

Definition 12 (Electron-volt)**.** *An electron-volt (eV) is a unit of energy equal to the energy gained or lost by an electron when it moves through an electric potential difference of one volt. Since energy is given by* $U = qV$*, for a charge equal to the elementary charge* e*, we have*

$$1\ eV = e \cdot 1\ V = 1.602 \times 10^{-19}\ J.$$

When analyzing circuits, current is defined using the convention of positive charge flow. By convention, current flows from higher potential to lower potential, even though in metallic conductors the actual charge carriers are electrons moving in the opposite direction.

When the circuit is closed, electrons flow externally from the anode to the cathode, while conventional current flows from the cathode to the anode. As the charges move through the circuit, the battery's chemical energy is converted into electrical energy and then into other forms such as heat or light.

4.2 Electromotive Force

Definition 13 (Electromotive Force (EMF))**.** *Electromotive Force (EMF)*[2] *is the energy supplied per unit charge by an energy source such as a battery or generator. It represents the work done by the source to move a charge around a complete circuit. EMF is measured in volts (V).*

To better understand the concept of EMF, consider the following analogy: EMF is like a voltage credit that is then all spent by dropping it over the elements of the circuit. Think of your checking account with two columns: credit (money in) and debit (money spent). EMF is the "credit" that is then all "spent" by dropping it over the elements of the circuit.

4.3 Ohm's Law

Definition 14 (Ohm's Law)**.** *Ohm's Law states that the current I flowing through a conductor is directly proportional to the voltage V across it and inversely proportional to its resistance R:*

$$I = \frac{V}{R}.$$

Microscopically, Ohm's Law can be understood in terms of the motion of electrons in a conductor. When a voltage is applied across a conductor, it creates an electric field that exerts a force on the free electrons, causing them to move and create an electric current. The resistance of the conductor arises from collisions between the electrons and the atoms in the material, which impede their motion.

The current density J is related to the electric field strength E by

$$J = \sigma E, \qquad E = J\rho_r,$$

where σ is the conductivity and ρ_r is the resistivity. The current is

$$I = AJ = A\sigma E.$$

Using $E = \Delta V/l$,

$$I = \frac{A\sigma\,\Delta V}{l} = \frac{A\,\Delta V}{\rho_r l}.$$

From Ohm's Law, $\Delta V = IR$, which gives the resistance in terms of material properties:

$$R = \frac{\rho_r l}{A}.$$

Ohm's Law can be represented graphically using the Ohm's Law Wheel, which illustrates the relationships between current, voltage, resistance, and conductance.

[2] EMF is the total energy supplied per unit charge by a source. The terminal voltage across a real source is typically less than the EMF due to internal resistance.

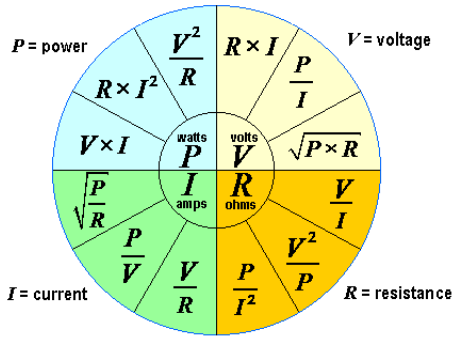

Figure 3: Ohm's Law Wheel and Current Density.

4.4 Kirchhoff's Laws

Definition 15 (Kirchhoff's Voltage Law (KVL))**.** *The algebraic sum of all potential differences around any closed loop in a circuit is equal to zero.*

KVL allows us to determine the potential difference between two points in a circuit by accounting for the voltage changes across each component along the path.

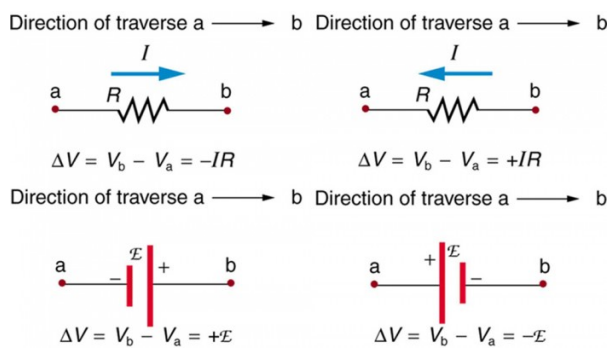

Figure 4: Each resistor and voltage source is traversed from a to b. The corresponding potential changes across each element are indicated. (The script $\mathcal{E}$ denotes the emf.)

Another common circuit element is the inductor. In the context of KVL, the voltage across an inductor is included in the loop equation in the same way as the voltage across resistors or capacitors.

Definition 16 (Kirchhoff's Current Law (KCL))**.** *The sum of the currents entering a node is equal to the sum of the currents leaving the node.*

4.5 Direct and Alternating Current

Definition 17 (Direct Current (DC))**.** *Direct Current (DC) is a form of current where voltage and current are constant over time; commonly found in batteries.*

Definition 18 (DC Offset)**.** *A DC offset is the addition of a constant DC value to an AC signal. This shifts the entire signal up or down relative to the* 0 *V level, without changing the shape of the AC signal.*

Definition 19 (Alternating Current (AC))**.** *Alternating Current (AC) is a form of current that changes over time, often in a sinusoidal manner. AC currents are commonly used in power distribution systems, such as household electrical outlets.*

In general, an alternating current source is represented in circuit diagrams by a circular source symbol containing a sinusoidal waveform.

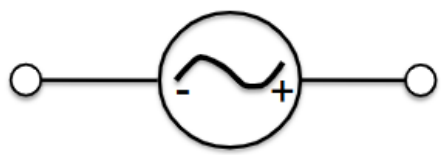

Figure 5: Alternating Current symbol.

If the current is sinusoidal, it is commonly written as

$$I(t) = I_0 \sin(\omega t),$$

where I_0 is the amplitude and ω is the angular frequency.

4.6 Static Circuits

Consider the variation of electric potential along a conducting wire.

If the wire has a small but non-negligible resistance that is uniformly distributed, the electric potential decreases approximately linearly with distance, since the voltage drop across a uniform conductor is proportional to its length.

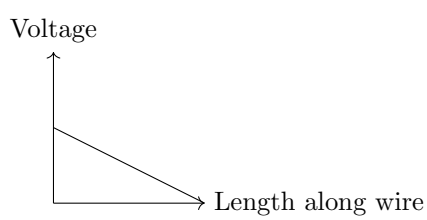

In contrast, if a discrete resistor with resistance much larger than that of the wire is introduced, nearly all of the voltage drop occurs across the resistor. The potential along the wire remains approximately constant, with a sharp decrease only at the location of the resistor.

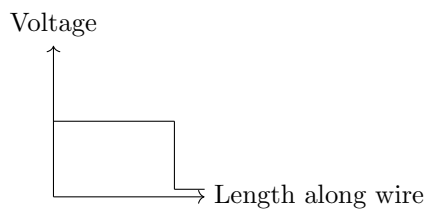

4.7 Circuit Classification

Circuits may be classified according to whether they are linear or non-linear, and whether they contain active or passive elements. A linear circuit element has a linear (straight-line) relationship between voltage and current, meaning $V \propto I$; a non-linear element does not.

Definition 20 (Passive Linear Circuit)**.** *Contains only passive linear elements, such as resistors, capacitors, inductors, and transformers.*

Definition 21 (Active Linear Circuit)**.** *Contains at least one active element (e.g. transistor, op-amp, or independent source) while maintaining an overall linear V–I relationship.*

Definition 22 (Passive Non-linear Circuit)**.** *Contains only passive components but includes at least one non-linear element, such as a diode.*

Definition 23 (Active Non-linear Circuit)**.** *Contains at least one active element and at least one non-linear element.*

January 20, 2026

5 Circuit Components

5.1 Resistors

Definition 24. *A resistor is a device that opposes the flow of current through it, resulting in a voltage drop across it. Resistors are characterized by their resistance value R, measured in ohms (Ω).*

When resistors are connected in series, their resistances add: $R_{\text{tot}} = R_1 + R_2 + \cdots + R_n$. In parallel, they add inversely: $\frac{1}{R_{\text{tot}}} = \frac{1}{R_1} + \frac{1}{R_2} + \cdots + \frac{1}{R_n}$.

Example.

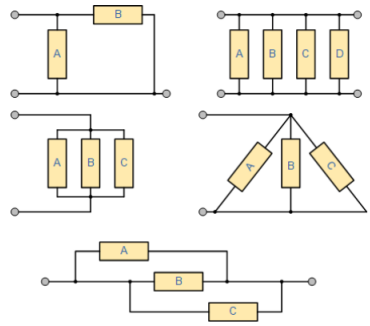

Figure 6: Examples of components wired in parallel.

5.1.1 Temperature Dependence

The resistance of many metals varies with temperature as

$$R_T = R_0 \left[1 + \alpha(T - T_0)\right],$$

where R_0 is the resistance at reference temperature T_0 and α is the linear temperature coefficient.

5.1.2 Power Dissipation

When current flows through a resistor, electrical energy is converted into heat. The power P dissipated is

$$P = \Delta V \cdot I = I^2 R = \frac{(\Delta V)^2}{R}.$$

The total energy dissipated over time is

$$U = \int R\, I^2(t)\, dt.$$

5.2 Batteries

Definition 25 (Battery)**.** *A battery converts stored chemical energy into electrical energy by maintaining a potential difference between its terminals. Inside the battery, chemical reactions separate charge, creating an excess of negative charge at the anode and positive charge at the cathode.*

Definition 26 (Ideal Battery)**.** *An ideal battery is a voltage source with zero internal resistance that maintains a constant voltage regardless of the current drawn.*

Definition 27 (Real Battery)**.** *A real battery has internal resistance r that causes the terminal voltage to decrease as the current increases, leading to energy loss as heat.*

A real battery is modelled as an ideal voltage source V_0 in series with an internal resistance r. The terminal voltage when current I is drawn is

$$V_{\text{terminal}} = V_0 - Ir.$$

If an external resistor R is connected, Ohm's Law gives

$$V_0 = Ir + IR.$$

5.3 Ground and Reference

Definition 28 (Circuit Ground)**.** *The reference point in a circuit at which the electric potential is defined to be zero. All voltages in the circuit are measured relative to this point. It does not have to be physically connected to the Earth. Symbol:* *.*

Definition 29 (Chassis Ground)**.** *A conductive frame or enclosure of a device used as a common return path for current; often connected to circuit ground. It provides shielding and safety by preventing exposed metal parts from reaching dangerous voltages. Symbol:* *.*

Definition 30 (Earth Ground)**.** *A physical connection to the Earth, typically made using a metal rod or pipe driven into the soil, used primarily for safety to allow fault currents to safely dissipate.*

5.4 Capacitors

Definition 31 (Capacitor)**.** *A capacitor is a passive electrical component that stores energy in an electric field between two conductive plates separated by an insulating material (dielectric) or space. The capacitance C is defined as the ratio of the charge Q stored on one plate to the voltage V across the plates:*

$$C = \frac{Q}{V}. \tag{2}$$

The SI unit of capacitance is the farad (F).

For a parallel plate capacitor,

$$C = \frac{\varepsilon A}{d},$$

where ε is the dielectric constant, A is the area of the plates, and d is the distance between them. The permittivity of free space is

$$\varepsilon_0 = 8.85 \times 10^{-12}\,\text{F/m}.$$

Capacitors combine oppositely to resistors:

$$C_{\text{tot}} = C_1 + C_2 + \cdots + C_n \quad \text{(parallel)}, \qquad \frac{1}{C_{\text{tot}}} = \frac{1}{C_1} + \frac{1}{C_2} + \cdots + \frac{1}{C_n} \quad \text{(series)}.$$

5.4.1 Dielectric Insulator

Definition 32 (Dielectric Insulator)**.** *A dielectric is an insulating material that permits an electric field but does not conduct charge. When placed between capacitor plates, it increases capacitance by reducing the effective electric field, allowing more charge to be stored for a given voltage. Its permittivity is*

$$\varepsilon = \varepsilon_r \, \varepsilon_0,$$

where ε_r is the relative permittivity.

5.4.2 Energy Stored in a Capacitor

The energy stored equals the work required to move charge from one plate to the other. Since $V = Q/C$,

$$W = \int_0^Q V \, dQ = \int_0^Q \frac{Q}{C} \, dQ = \frac{1}{2} C V^2.$$

5.4.3 Charging a Capacitor

From (2) and (1), the current-voltage relationship for a capacitor is

$$I = C \frac{dV}{dt}, \qquad V(t) = \frac{1}{C} \int I \, dt + V_0.$$

For constant current,

$$V(t) = V_0 + \frac{I}{C} \, t,$$

so the voltage increases linearly with slope I/C.

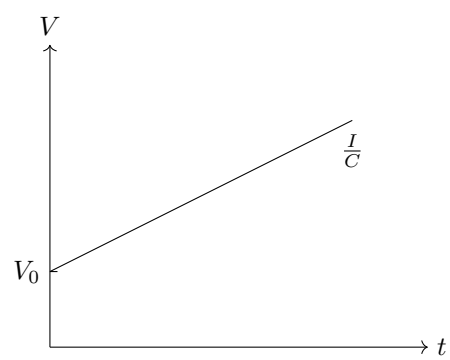

5.5 Inductors

Definition 33 (Inductor)**.** *An inductor is a passive electrical component that stores energy in a magnetic field created by the flow of current through a coil of*

wire. The inductance L of an inductor is defined as the ratio of the magnetic flux Φ linking the coil to the current I flowing through it:

$$L = \frac{\Phi}{I}.$$

The SI unit of inductance is the henry (H).

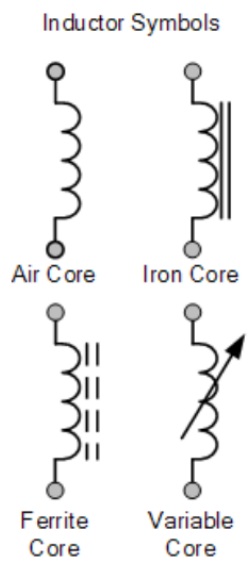

Figure 7: Circuit symbols for inductors with different core types.

5.5.1 Energy Storage

Energy is stored in the magnetic field within the inductor coil. For a constant applied voltage, the current in the coil rises linearly with slope V/L:

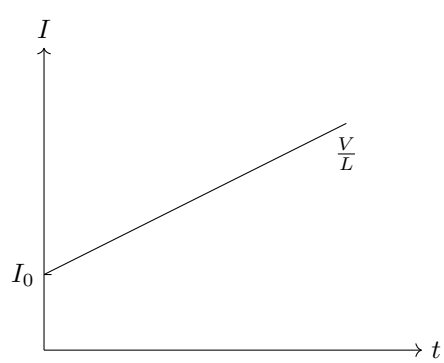

The energy stored is

$$W = \int_0^t V \cdot i \, dt = \int L \frac{di}{dt} \cdot i \, dt = \frac{1}{2} L I^2.$$

5.5.2 Networks of Inductors

Inductors in Series. The equivalent inductance is

$$L_{\text{total}} = \sum_{i=1}^{N} L_i.$$

Inductors in Parallel. The equivalent inductance satisfies

$$\frac{1}{L_{\text{total}}} = \sum_{i=1}^{N} \frac{1}{L_i}.$$

These relations are formally identical to those of resistors, but arise from the inductor voltage-current relation.

5.5.3 Solenoid

Definition 34 (Solenoid)**.** *A solenoid is a long cylindrical coil of wire designed to produce a nearly uniform magnetic field inside it when current flows.*

For a solenoid of length l, cross-sectional area $A = \pi r^2$, number of turns N, and core permeability μ,

$$L = \frac{\mu N^2 A}{l}.$$

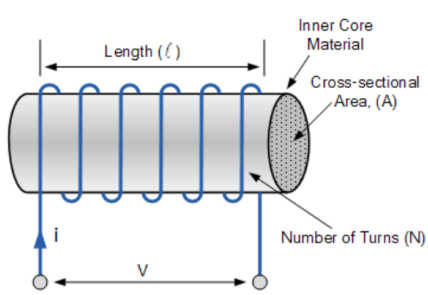

Figure 8: Schematic representation of a solenoid.

5.6 Transformers & Mutual Inductance (Not Tested)

Definition 35 (Transformer)**.** *A transformer is a device consisting of two coils of wire (primary and secondary) magnetically coupled through a shared core. Its main purpose is to transfer energy between circuits to change voltage levels. Symbol:*

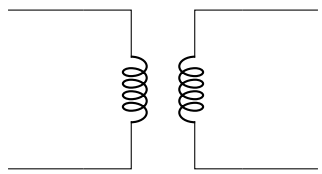

A transformer has N_1 and N_2 turns wound around a common core. A time-varying current I_1 in the primary produces flux Φ_B through the secondary. By Faraday's law,

$$\mathcal{E}_2 = -\frac{d\Phi_B}{dt} = -M\frac{dI_1}{dt}.$$

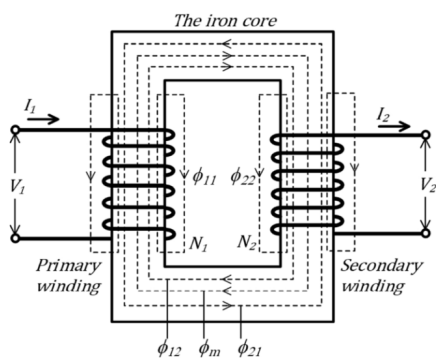

Figure 9: Visual representation of a transformer.

The SI unit of mutual inductance is the henry (H). If $I_1(t) = I_0 \sin(\omega t)$, then

$$V_2(t) = M\omega I_0 \cos(\omega t),$$

so the secondary voltage is sinusoidal but shifted in phase by $\pi/2$ relative to the current.

For an ideal transformer, power is conserved ($V_1 I_1 = V_2 I_2$), giving the transformer relations:

$$\frac{V_1}{V_2} = \frac{N_1}{N_2}, \qquad \frac{I_1}{I_2} = \frac{N_2}{N_1}.$$

Remark 1. *Long-distance power lines use high-voltage AC because it significantly reduces energy loss during transmission: higher voltage means lower current, which minimises resistive heat loss. Transformers efficiently step AC voltage up and down as needed.*

6 Circuit Analysis

6.1 RC Circuit

Definition 36 (RC Circuit)**.** *An RC circuit consists of a resistor R, a capacitor C, and a constant source V_0.*

Example. *Visual representation of an RC circuit:*

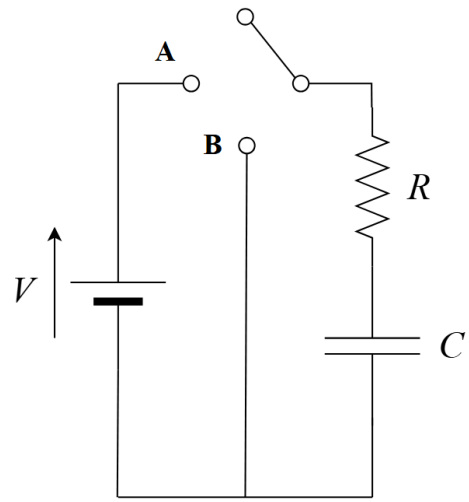

Figure 10: Visual representation of an RC circuit.

6.1.1 DC Analysis

Charging

Consider an initially uncharged capacitor connected in series with a resistor and a constant source V_0. Applying KVL,

$$V_0 = v_R(t) + v_C(t) = i(t)R + \frac{1}{C}\int_0^t i(\tau)\,d\tau.$$

Differentiating and solving,

$$I(t) = \frac{V_0}{R}e^{-t/\tau}, \qquad V_C(t) = V_0\Big(1 - e^{-t/\tau}\Big),$$

where $\tau = RC$ is the time constant. As $t \to \infty$, the current decays to zero and $V_C \to V_0$. At $t = 0$, the capacitor behaves like a short circuit; as $t \to \infty$, it behaves like an open circuit.

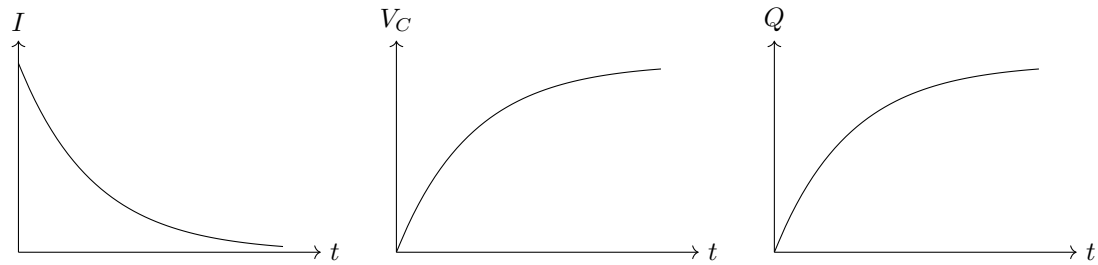

Discharging

If the source is removed and the capacitor initially has voltage V_0:

$$I(t) = -\frac{V_0}{R} e^{-t/\tau}, \qquad V_C(t) = V_0\, e^{-t/\tau}.$$

Both current and voltage decay exponentially to zero.

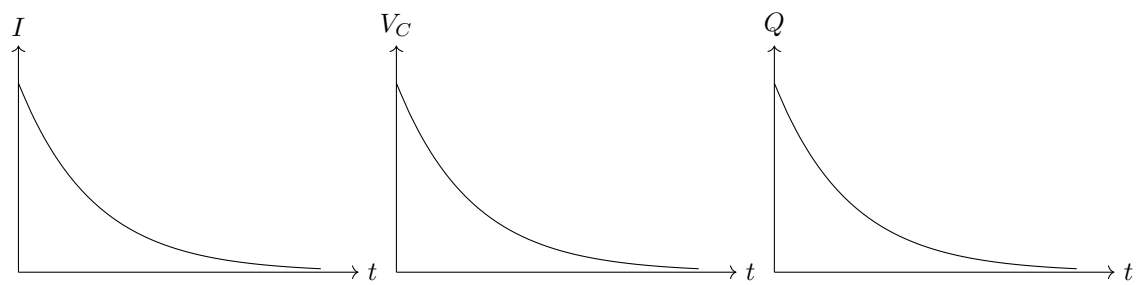

January 29, 2026

6.2 RC Circuit with AC Driving

6.2.1 Driving Frequency and Time Constant

For a periodic input with period T and angular frequency $\omega = \frac{2\pi}{T} = 2\pi\nu$, the time constant for an RC circuit is

$$\tau_{RC} = RC.$$

The circuit behaviour depends on the ratio of T to τ:

- Low frequency: $T \gg \tau$
- High frequency: $T \ll \tau$

6.2.2 RC Circuit with Square-Wave Input

Low frequency ($T \gg \tau$)

- Capacitor fully charges and discharges each half-cycle.
- Voltage drops almost entirely across the capacitor.
- Current is nearly zero (except for spikes at each voltage jump).
- Capacitor behaves approximately like an open circuit (break).

High frequency ($T \ll \tau$)

- Capacitor does not have time to charge.
- Very little voltage is dropped across the capacitor.
- Current values are close to what we expect for a pure resistor circuit; voltage profile is triangle-wave-like.
- Capacitor behaves approximately like a short circuit.

6.2.3 Integrator and Differentiator Behaviour

Low frequency

At low frequency, the capacitor has time to fully charge, so its voltage tracks the input: $\Delta V_C(t) \approx V(t)$. The current is therefore $I \approx C\frac{dV}{dt}$, and the voltage across the resistor is

$$\Delta V_R(t) = R\frac{dQ}{dt} \approx \tau\frac{dV_{\text{in}}(t)}{dt}, \qquad \tau = RC.$$

The resistor acts as a differentiator. Sharp transitions in the square-wave input produce current spikes.

High frequency

At high frequency, the capacitor has no time to charge, so the resistor voltage tracks the input: $\Delta V_R(t) \approx V(t)$, giving $I \approx V(t)/R$. The capacitor voltage is then

$$\Delta V_C(t) = \frac{Q}{C} \approx \frac{1}{\tau}\int_0^t V_{\text{in}}(t')\,dt', \qquad \tau = RC.$$

The capacitor acts as an integrator. A square wave input produces a triangle-wave-like voltage across the capacitor.

6.3 LR Circuit

Definition 37 (LR Circuit)**.** *An LR circuit is a circuit in which an inductor is connected in series with a resistor.*

Example. *Consider this circuit at the moment it is turned on (switch connects to 'A'). If the inductor were replaced with a short, a current V/R would flow immediately, with all of the voltage drop across R.*

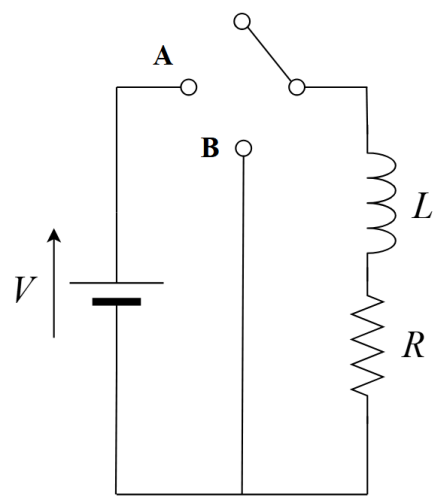

Figure 11: Visual representation of an LR circuit.

The current flow produces a magnetic flux through the coil. By Lenz's law, the coil induces a voltage equal to the battery's voltage, opposing the change in flux. Therefore, just at the instant the switch is closed, the current flow is zero.

For a single coil, the voltage-current relationship is

$$V = L\frac{di}{dt},$$

where L is the self-inductance. The characteristic time constant is $\tau = L/R$.

6.3.1 DC Analysis

Charging

When the switch is connected to terminal A,

$$I(t) = \frac{V}{R}\left(1 - e^{-t/\tau}\right), \qquad V_L(t) = V\, e^{-t/\tau}.$$

At $t = 0$, an inductor behaves like an open circuit. As $t \to \infty$, it behaves like a short circuit and carries the full steady-state current V/R.

Discharging

$$V_L(t) = V_0\, e^{-t/\tau}, \qquad I(t) = I_0\, e^{-t/\tau}.$$

Both current and voltage decay exponentially to zero.

6.4 LR Circuit with AC Driving

6.4.1 Driving Frequency and Time Constant

For a periodic input with period T and angular frequency $\omega = \frac{2\pi}{T} = 2\pi\nu$, the time constant for an LR circuit is

$$\tau_{LR} = \frac{L}{R}.$$

The circuit behaviour depends on the ratio of T to τ:

- Low frequency: $T \gg \tau$
- High frequency: $T \ll \tau$

6.4.2 LR Circuit with Square-Wave Input

Low frequency

- Inductor fully responds each half-cycle.
- Voltage drops almost entirely across the resistor.
- Current closely follows the input and is approximately square-wave-like.
- Inductor behaves approximately like a short circuit.

High frequency

- Inductor does not have time to respond.
- Voltage drops almost entirely across the inductor.
- Current changes very little; the resistor voltage profile consists of sharp spikes at each transition.
- Inductor behaves approximately like an open circuit.

6.4.3 Integrator and Differentiator Behaviour

Low frequency

At low frequency, the inductor has time to fully respond, so the resistor voltage tracks the input: $\Delta V_R(t) \approx V(t)$, giving $I \approx V_{\text{in}}(t)/R$. The voltage across the inductor is then

$$\Delta V_L(t) = L\frac{dI}{dt} \approx \tau \frac{dV_{\text{in}}(t)}{dt}, \qquad \tau = \frac{L}{R}.$$

The inductor acts as a differentiator. Sharp transitions in the square-wave input produce voltage spikes across the inductor.

High frequency

At high frequency, the inductor has no time to respond, so its voltage tracks the input: $\Delta V_L(t) \approx V(t)$, giving $L\frac{dI}{dt} \approx V_{\text{in}}(t)$. The voltage across the resistor is then

$$\Delta V_R(t) = IR \approx \frac{1}{\tau}\int_0^t V_{\text{in}}(t')\,dt', \qquad \tau = \frac{L}{R}.$$

The resistor acts as an integrator. A square-wave input produces a triangle-wave-like voltage across the resistor.

6.5 Frequency Behaviour Summary

Circuit	Low frequency ($T \gg \tau$)	High frequency ($T \ll \tau$)
RC	Capacitor $\approx$ open (break)	Capacitor $\approx$ short
LR	Inductor $\approx$ short	Inductor $\approx$ open

Important physical facts:

- A capacitor blocks DC and resists changes in voltage.
- An inductor passes DC (after long time) and resists changes in current.

The LR circuit is the dual of the RC circuit. In an LR circuit, current plays the role that voltage plays in an RC circuit, and the integrator/differentiator roles of the components are swapped:

	RC Circuit	LR Circuit
Differentiator	Resistor (low freq.)	Inductor (low freq.)
Integrator	Capacitor (high freq.)	Resistor (high freq.)

7 Phasors and Complex Impedance

February 5, 2026

7.1 Complex Representation of AC Signals

A complex signal is defined as

$$\tilde{V}(t) = V_0 e^{j\phi(t)} = V_0 e^{j(\omega t + \phi_0)}.$$

This complex signal is not physical, but it embeds the real-valued physical signal $V(t)$ as its real part:

$$V(t) = V_0 \cos(\phi(t)) = \mathrm{Re}\Big[V_0 e^{j\phi(t)}\Big] = \mathrm{Re}\Big[\tilde{V}(t)\Big].$$

7.2 Working with Complex Signals

To analyze an AC circuit using complex signals, perform circuit analysis[3] with $\tilde{V}(t)$ to obtain a complex output signal $\tilde{V}_{\mathrm{out}}(t)$. The real-valued physical output is then recovered by taking the real part:

$$V_{\mathrm{out}}(t) = \mathrm{Re}\Big[\tilde{V}_{\mathrm{out}}(t)\Big].$$

Alternatively, one can extract directly the change in signal amplitude and phase shift between input and output.

7.3 Capacitor Current

Consider a voltage signal $V(t) = \mathrm{Re}[\tilde{V}(t)]$ dropped across a capacitor. To find the current $I(t)$, we first compute the complex current $\tilde{I}(t)$ arising from $\tilde{V}(t)$, then take the real part:

$$\tilde{I}(t) = \frac{d\tilde{Q}}{dt} = C\frac{d\tilde{V}(t)}{dt} = jC\omega V_0 e^{j(\omega t+\phi_0)} = jC\omega\tilde{V}.$$

Extracting $I(t)$ using the fact that $j = e^{j\pi/2}$:

$$I(t) = \mathrm{Re}\Big[\tilde{I}(t)\Big] = C\omega V_0 \,\mathrm{Re}\Big[e^{j(\omega t+\phi_0+\pi/2)}\Big] = C\omega V_0 \cos\big(\omega t + \phi_0 + \tfrac{\pi}{2}\big).$$

Note that I vanishes in the limit $\omega \to 0$ (DC limit), since in steady state the capacitor fully charges and fully opposes the voltage source. From the expression above, the current leads the input voltage by $\pi/2$; equivalently, the input voltage lags the current by $\pi/2$.

7.4 Impedance of a Capacitor

Define the capacitive impedance

$$Z_C = \frac{1}{j\omega C} \implies \tilde{I} = \frac{\tilde{V}}{Z_C},$$

which is the complex generalization of Ohm's Law. The quantity Z is a complex resistance called impedance. The capacitive impedance is very large at low ω

[3] Circuit analysis is the process of determining the voltages and currents throughout a circuit by applying circuit laws (KVL, KCL) and component relationships. For AC circuits, this is done using the complex signal $\tilde{V}(t)$ in place of the real signal, which simplifies differentiation and integration into algebraic operations.

and decreases as ω increases. In the DC limit $\omega \to 0$, $Z_C \to \infty$, which is equivalent to saying the capacitor blocks DC signals. The complex character of the impedance encodes how the capacitor affects the phase offset between input and output signals.

7.5 Impedance

An analogous calculation for an inductor and resistor yields the following impedance table:

Component	Impedance (Z)	Phase offset of current relative to voltage
Resistor	R	0
Capacitor	$\frac{1}{j\omega C}$	$+\pi/2$ (current leads voltage)
Inductor	$j\omega L$	$-\pi/2$ (current lags voltage)

February 10, 2026

7.6 Phase Intuition

A capacitor causes current to lead voltage by $\pi/2$ because the current flowing into the capacitor must first accumulate charge on its plates before a voltage difference can be established. Since $I = C\frac{dV}{dt}$, maximum current flows when the voltage is changing fastest (crossing zero) and zero current flows when the voltage is stable at its peak.

An inductor causes current to lag voltage because its magnetic properties, governed by Lenz's law, oppose changes in current flow ($V = L\frac{dI}{dt}$), causing the current waveform to reach its maximum 90 after the voltage waveform. Voltage is proportional to the rate of change of current, meaning maximum voltage occurs when current changes fastest (at zero crossing) and zero voltage occurs when the current is constant (at its peak), forcing a 90 phase shift.

7.7 Power Dissipation of AC Signals

The power dissipated by a circuit element driven by an AC signal is found by averaging over one cycle:

$$P = \frac{1}{T}\int_0^T I(t)\,\Delta V(t)\,dt.$$

Taking $V(t) = V_0\cos(\omega t)$ and $I(t) = I_0\cos(\omega t + \phi_0)$, this gives

$$P = \frac{V_0 I_0}{T}\int_0^T \cos(\omega t)\cos(\omega t + \phi_0)\,dt = \frac{V_0 I_0}{2}\cos(\phi_0) = V_{\text{rms}}\,I_{\text{rms}}\cos(\phi_0).$$

For a capacitor and an inductor, $\phi_0 = \pm\pi/2$, so $P = 0$; they do not dissipate energy but instead store and release it. For a resistor, $\phi_0 = 0$, so $P = V_{\text{rms}}\,I_{\text{rms}}$; all the energy is dissipated as heat.

7.8 Adding Impedances

Impedances combine exactly as resistances do:

$$Z_{\text{tot}} = Z_1 + Z_2 \quad \text{(series)}, \qquad Z_{\text{tot}} = \left(\frac{1}{Z_1} + \frac{1}{Z_2}\right)^{-1} \quad \text{(parallel)}.$$

7.9 Sinusoidally Driven RC Circuit

Example (Current in Sinusoidally Driven RC Circuit)**.** *Find the current in the following RC circuit:*

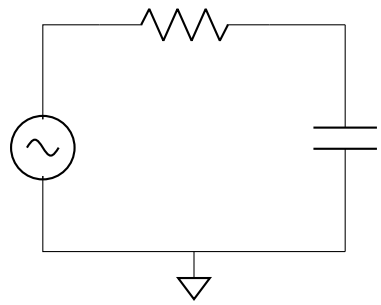

We have $\tilde{V}(t) = V_0 e^{j\omega t}$, $Z_R = R$, *and* $Z_C = \frac{1}{j\omega C}$. *The total impedance is*

$$Z_{tot} = Z_R + Z_C = R + \frac{1}{j\omega C} = \frac{1 + j\omega RC}{j\omega C} = \frac{1 + j\omega\tau}{j\omega C},$$

where $\tau = RC$. *The complex current is*

$$\tilde{I}(t) = \frac{\tilde{V}(t)}{Z_{tot}} = \frac{j\omega C\, V_0\, e^{j\omega t}}{1 + j\omega\tau}.$$

Amplitude. *The magnitude of the total impedance is*

$$|Z_{tot}|^2 = R^2 + \frac{1}{\omega^2 C^2} = R^2\, \frac{1 + (\omega\tau)^2}{(\omega\tau)^2},$$

so the current amplitude is

$$|\tilde{I}| = \frac{V_0}{|Z_{tot}|} = \frac{V_0}{R} \cdot \frac{\omega\tau}{\sqrt{1 + (\omega\tau)^2}}.$$

At $\omega = 0$ *(DC limit) the current vanishes; as* $\omega \to \infty$ *it rises to* $I_{\max} = V_0/R$, *since the capacitive impedance vanishes.*

Phase offset. *The phase of the current leads the voltage by*

$$\phi = \arctan\left(\frac{1}{\omega\tau}\right).$$

The full complex current is therefore

$$\tilde{I}(t) = \frac{V_0}{R} \cdot \frac{\omega\tau}{\sqrt{1 + (\omega\tau)^2}}\, e^{j(\omega t + \phi)}.$$

Limiting cases. *In the DC limit ($\omega \to 0$), the voltage drops almost entirely across the capacitor and the current leads the voltage by $\phi = \arctan(\infty) = \pi/2$. In the high-frequency limit ($\omega \to \infty$), the voltage drops almost entirely across the resistor and the current is in phase with the voltage: $\phi = \arctan(0) = 0$.*

February 12, 2026

7.10 Impedance Divider

Consider a general voltage divider circuit built from two impedances Z_1 and Z_2 in series, driven by a sinusoidal source. The output voltage $\tilde{V}'$ is taken across Z_2:

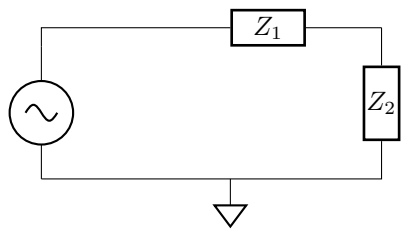

The transfer function is

$$\frac{\tilde{V}'}{\tilde{V}} = \frac{Z_2}{Z_1 + Z_2} = \left|\frac{\tilde{V}'}{\tilde{V}}\right| e^{j\phi},$$

where $\left|\frac{\tilde{V}'}{\tilde{V}}\right|$ describes how the output amplitude is affected relative to the input amplitude, and ϕ is the phase shift of the output relative to the input.

7.11 Filter Examples

Example (RC Low-Pass Filter)**.** *Consider the following circuit, with output taken across the capacitor:*

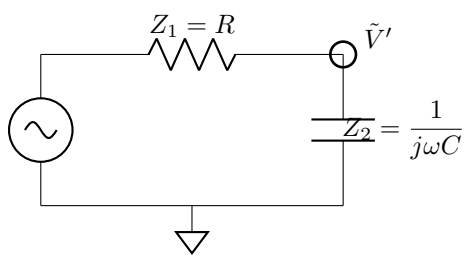

The transfer function is

$$\frac{\tilde{V}'}{\tilde{V}} = \frac{1/j\omega C}{R + 1/j\omega C} = \frac{1}{1 + j\omega\tau},$$

where $\tau = RC$. Expanding,

$$\frac{1}{1 + j\omega\tau} = \frac{1 - j\omega\tau}{1 + (\omega\tau)^2} = \frac{1}{1 + (\omega\tau)^2} - j\frac{\omega\tau}{1 + (\omega\tau)^2}.$$

The amplitude ratio and phase shift are therefore

$$\left(\frac{V_o'}{V_o}\right)^2 = \left|\frac{\tilde{V}'}{\tilde{V}}\right|^2 = \frac{1}{1+(\omega\tau)^2}, \qquad \phi = -\arctan(\omega\tau).$$

We can plot both the amplitude ratio and phase shift as functions of $\omega\tau$ (linear scale):

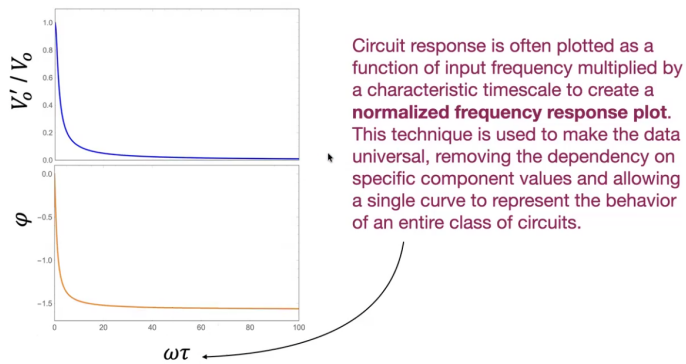

Conventionally, the amplitude is expressed in dB and the phase in degrees, with $\omega\tau$ on a logarithmic scale, where $V_{dB} = 20\log_{10}(V) = 10\log_{10}(V^2)$:

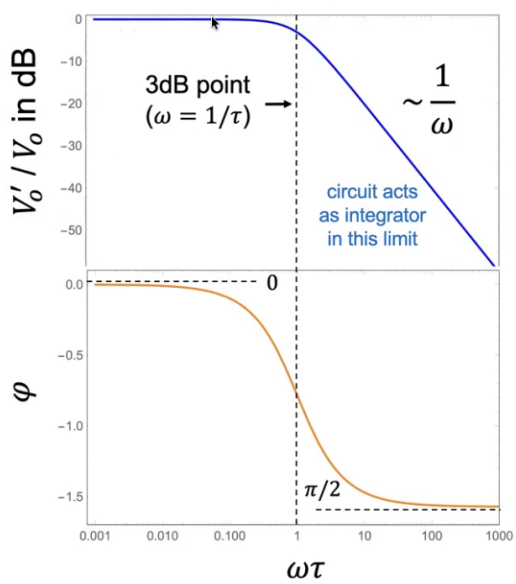

In the high-frequency limit ($\omega\tau \gg 1$), the amplitude falls off as $1/\omega\tau$, and the circuit acts as an integrator.

Example (RC High-Pass Filter)**.** *Consider the following circuit, with output taken across the resistor:*

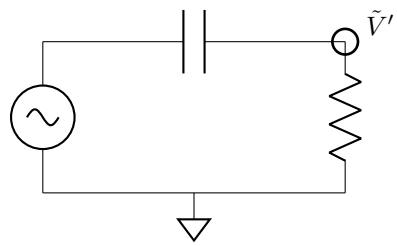

The transfer function is

$$\frac{\tilde{V}'}{\tilde{V}} = \frac{R}{R + 1/j\omega C} = \frac{j\omega\tau}{1 + j\omega\tau}.$$

Expanding,

$$\frac{j\omega\tau}{1 + j\omega\tau} = \frac{j\omega\tau(1 - j\omega\tau)}{1 + (\omega\tau)^2} = \frac{(\omega\tau)^2}{1 + (\omega\tau)^2} + j\frac{\omega\tau}{1 + (\omega\tau)^2}.$$

The amplitude ratio and phase shift are therefore

$$\left(\frac{V_o'}{V_o}\right)^2 = \left|\frac{\tilde{V}'}{\tilde{V}}\right|^2 = \frac{(\omega\tau)^2}{1 + (\omega\tau)^2}, \qquad \phi = \arctan\left(\frac{1}{\omega\tau}\right).$$

The Bode plot for this circuit is:

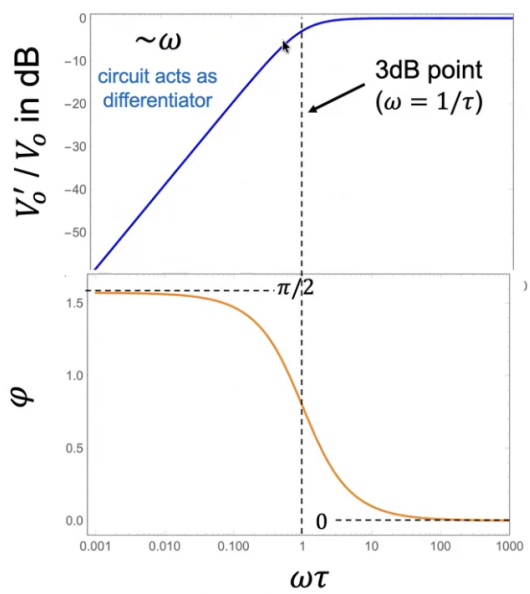

Example (Two-Stage RC Circuit)**.** *Consider the following circuit, in which a resistor R_2 is placed in parallel with the capacitor:*

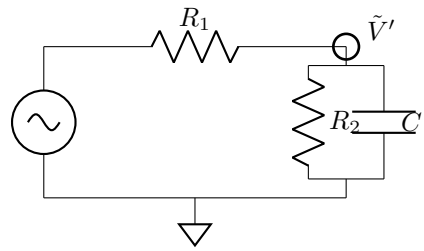

Here $Z_1 = R_1$ and $Z_2 = R_2 \parallel \frac{1}{j\omega C}$, so the transfer function is

$$\frac{\tilde{V}'}{\tilde{V}} = \frac{1}{R_1\left(\frac{1}{R_2} + j\omega C\right) + 1}.$$

In the two limiting cases:

- ***High-frequency limit*** *($\omega \to \infty$): R_2 is short-circuited by the capacitor, giving $\frac{\tilde{V}'}{\tilde{V}} \to \frac{1}{1 + j\omega R_1 C}$ (low-pass RC).*
- ***Low-frequency limit*** *($\omega \to 0$): the capacitor is an open circuit, giving $\frac{\tilde{V}'}{\tilde{V}} \to \frac{R_2}{R_1 + R_2}$ (resistive divider).*

8 RLC Circuits

February 17, 2026

8.1 Charging with a Step Voltage

Consider the following series RLC circuit, with a switch closed at $t = 0$ to create a voltage step:

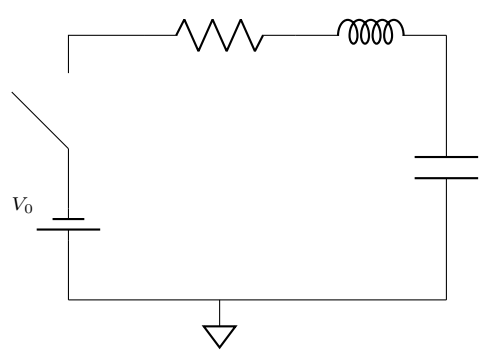

Summing voltage drops around the loop (KVL) gives

$$V_0 = RI + L\frac{dI}{dt} + \frac{Q}{C}.$$

Differentiating with respect to time and dividing through by L,

$$\frac{d^2I}{dt^2} + \frac{R}{L}\frac{dI}{dt} + \frac{1}{LC}I = 0.$$

We define the natural resonant frequency

$$\omega_0 \equiv \frac{1}{\sqrt{LC}},$$

at which the inductive and capacitive reactances are equal in magnitude. At this frequency, energy oscillates efficiently between the inductor and capacitor, the circuit is purely resistive, and the impedance is minimised. We also define the damping factor

$$\Gamma \equiv \frac{R}{L},$$

which represents the rate at which energy is dissipated by the resistor. The equation of motion becomes

$$\frac{d^2I}{dt^2} + \Gamma\frac{dI}{dt} + \omega_0^2\, I = 0.$$

8.2 Solution by Characteristic Equation

Substituting the trial solution $I(t) = ce^{pt}$ gives the characteristic equation

$$p^2 + \Gamma p + \omega_0^2 = 0 \implies p = -\frac{\Gamma}{2} \pm \sqrt{\left(\frac{\Gamma}{2}\right)^2 - \omega_0^2}.$$

The nature of the solution depends on the sign of the discriminant, yielding three distinct cases.

8.3 Damping Cases

Case 1: Underdamped ($\Gamma < 2\omega_0$). The discriminant is negative, giving complex roots. The solution is a sinusoid with exponentially decaying envelope:

$$I(t) = \frac{V_0}{L\omega_f}\sin(\omega_f t)\, e^{-\Gamma t/2},$$

where the damped frequency is

$$\omega_f = \sqrt{\omega_0^2 - \left(\frac{\Gamma}{2}\right)^2}.$$

This is the most physically interesting case, exhibiting oscillatory behaviour before settling. As $R \to 0$, damping vanishes, $\omega_f \to \omega_0$, and in the unphysical limit of a pure LC circuit the oscillation persists indefinitely at the natural frequency ω_0.

Case 2: Overdamped ($\Gamma > 2\omega_0$). The discriminant is positive, giving two distinct real roots. The solution decays without oscillation:

$$I(t) = \frac{V_0}{L\omega_f'} \sinh(\omega_f' t)\, e^{-\Gamma t/2},$$

where

$$\omega_f' = \sqrt{\left(\frac{\Gamma}{2}\right)^2 - \omega_0^2}.$$

Case 3: Critically damped ($\Gamma = 2\omega_0$). The discriminant is zero, giving a repeated real root. The solution is

$$I(t) = \frac{V_0}{L}\, t\, e^{-\Gamma t/2}.$$

This case represents the fastest return to equilibrium without oscillation.

Case	Condition	Behaviour
Underdamped	$\Gamma < 2\omega_0$	Oscillatory, decaying envelope
Critically damped	$\Gamma = 2\omega_0$	Fastest non-oscillatory return
Overdamped	$\Gamma > 2\omega_0$	Slow, non-oscillatory decay

8.4 RLC Circuit with AC Driving

February 19, 2026

Consider the following series RLC circuit driven by a sinusoidal voltage source $V(t) = V_0 \cos(\omega t)$:

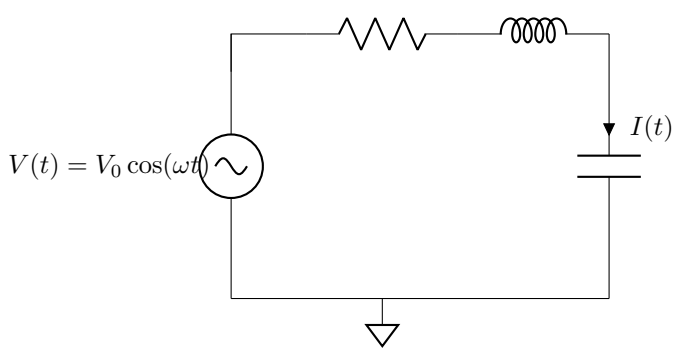

Using the complex representation $\tilde{V} = V_0 e^{j\omega t}$, the total impedance of the series circuit is

$$Z_{\text{tot}} = R + j\omega L + \frac{1}{j\omega C} = R\left(1 - \frac{\omega^2}{\omega_0^2} + j\omega\tau\right)\frac{1}{j\omega\tau} \cdot j\omega\tau,$$

so that the complex current is

$$\tilde{I} = \frac{\tilde{V}}{Z_{\text{tot}}} = \frac{\tilde{V}}{R} \cdot \frac{j\omega\tau}{1 - \dfrac{\omega^2}{\omega_0^2} + j\omega\tau},$$

where $\tau = L/R$ and $\omega_0 = 1/\sqrt{LC}$.

8.4.1 Amplitude

$$|\tilde{I}|^2 = \left(\frac{V_0}{R}\right)^2 \frac{(\omega\tau)^2}{\left(1 - \frac{\omega^2}{\omega_0^2}\right)^2 + (\omega\tau)^2}.$$

At $\omega = \omega_0$ the denominator reduces to $(\omega_0\tau)^2$, so $|\tilde{I}|$ reaches its maximum

$$I_{\max} = \frac{V_0}{R},$$

the frequency at which the circuit is maximally transmittant. At resonance, the capacitive and inductive impedances cancel exactly, leaving only R.

8.4.2 Phase

Multiplying numerator and denominator of $\tilde{I}/(\tilde{V}/R)$ by the complex conjugate of the denominator gives

$$\frac{\tilde{I}}{\tilde{V}/R} = \frac{(\omega\tau)^2 + j\omega\tau\left(1 - \frac{\omega^2}{\omega_0^2}\right)}{\left(1 - \frac{\omega^2}{\omega_0^2}\right)^2 + (\omega\tau)^2},$$

from which the phase of the current relative to the voltage is

$$\tan\phi = \frac{1 - \frac{\omega^2}{\omega_0^2}}{\omega\tau}.$$

The physical current is therefore

$$I(t) = |\tilde{I}|\cos(\omega t + \phi).$$

8.5 Quality Factor

The **quality factor** Q measures the sharpness of the resonance peak:

$$Q = \frac{1}{\omega_0\tau} = \frac{\omega_0 L}{R}.$$

A high Q corresponds to a narrow resonance. As $R \to 0$, the circuit approaches a pure LC resonator, $Q \to \infty$, and only oscillation at ω_0 can be sustained. At resonance the capacitive and inductive reactances are equal in magnitude but opposite in phase (offset by π radians), so they cancel exactly and the circuit presents purely resistive impedance to the driving source.

8.6 Power and Resonance

The instantaneous power delivered to the circuit is

$$P(t) = V(t)\, I(t) = V_0 I_0 \cos(\omega t)\cos(\omega t + \phi).$$

Time-averaging over one complete cycle gives

$$\langle P \rangle = \frac{1}{T}\int_0^T P(t)\, dt = \frac{V_0 I_0}{2}\cos\phi.$$

The factor $\cos\phi$ is called the **power factor**. Capacitors and inductors introduce a phase offset ϕ that reduces the efficiency of power delivery. In a pure LC circuit the phase offset is necessarily $\pm\pi/2$, so $\cos\phi = 0$ and the time-averaged power input vanishes — no net energy is delivered unless the circuit is driven exactly at resonance $\omega = \omega_0$, where the inductive and capacitive impedances cancel and $\phi = 0$.

8.7 Capacitor Voltage in a Driven RLC Circuit

March 10, 2026

For the driven series RLC circuit of Section 8.4, the voltage drop across the capacitor is

$$\Delta V_C = \frac{Q}{C} = \frac{1}{C}\int_0^t I(t')\, dt'.$$

Using the complex current $\tilde{I} = |\tilde{I}|e^{j(\omega t+\phi)}$, integrating gives

$$\tilde{V}_C = \frac{\tilde{I}}{j\omega C} = \frac{V_0}{\sqrt{\left(1-\dfrac{\omega^2}{\omega_0^2}\right)^2 + (\omega\tau)^2}}\, e^{j(\omega t+\phi-\pi/2)}.$$

Equivalently, from the impedance divider,

$$\frac{\tilde{V}'}{\tilde{V}} = \frac{Z_C}{Z_{\text{tot}}} = \frac{1}{1-\dfrac{\omega^2}{\omega_0^2} + j\omega\tau},$$

with amplitude and phase

$$\left|\frac{\tilde{V}'}{\tilde{V}}\right|^2 = \frac{1}{\left(1-\dfrac{\omega^2}{\omega_0^2}\right)^2 + (\omega\tau)^2}, \qquad \phi = -\arctan\left(\frac{\omega\tau}{1-\dfrac{\omega^2}{\omega_0^2}}\right).$$

The capacitor voltage peaks near, but slightly below, ω_0, because the peak is determined by the combination of maximum current flow and the frequency-dependent capacitive reactance, rather than by maximising the current alone.

8.7.1 Limiting Behaviour

Low frequency ($\omega \ll \omega_0$). The capacitive impedance dominates and nearly all of the input voltage is dropped across the capacitor. The output amplitude approaches V_0 and the phase offset approaches zero.

At resonance ($\omega = \omega_0$). Current is limited only by R and reaches its maximum. Large voltage drops appear across both the inductor and capacitor, but they cancel. The current is in phase with $V(t)$; since the capacitor voltage lags the current by $\pi/2$, it lags the input by $\pi/2$.

High frequency ($\omega \gg \omega_0$). The voltage drops almost entirely across the inductor, so $V(t) \approx L\frac{dI}{dt}$, giving

$$I(t) \approx \frac{1}{L}\int V(t')\,dt' = \frac{V_0}{\omega L}\sin(\omega t).$$

The capacitor voltage is then

$$\Delta V_C = \frac{1}{C}\int I(t')\,dt' \approx -\frac{V_0}{\omega^2 LC}\cos(\omega t) = -\left(\frac{\omega_0}{\omega}\right)^2 V(t).$$

The inductor current lags $V(t)$ by $\pi/2$; the capacitor voltage lags the current by a further $\pi/2$, so the capacitor voltage lags $V(t)$ by π in total.

Remark 2. *The **natural frequency** ω_0 is the inherent rate at which energy oscillates between the inductor and capacitor in the absence of external driving. The **resonant frequency** is the specific driving frequency that produces maximum current. For low damping these are nearly identical; for large resistance they diverge.*

8.8 Quality Factor

The quality factor Q_f is a dimensionless measure of the ratio of energy stored to energy dissipated per cycle:

$$Q_f = 2\pi\,\frac{W_s}{W_L},$$

where W_s is the energy stored in the circuit and W_L is the energy lost as heat per cycle.

8.8.1 Derivation for a Series RLC Circuit

Taking $I(t) = I_0\cos(\omega_0 t)$, the maximum energy stored (in the inductor at peak current) is

$$W_s = \tfrac{1}{2}LI_0^2.$$

By Joule's law[4], the energy dissipated per cycle $T_0 = 2\pi/\omega_0$ is

$$W_L = R\int_0^{T_0} I_0^2\cos^2(\omega_0 t)\,dt = \frac{RI_0^2T_0}{2} = \frac{\pi R I_0^2}{\omega_0}.$$

Therefore,

$$Q_f = 2\pi\cdot\frac{\frac{1}{2}LI_0^2}{\frac{\pi R I_0^2}{\omega_0}} = \frac{\omega_0 L}{R} = \frac{1}{\omega_0\tau}.$$

8.9 Quality Factor and Energy Decay

The quality factor is also directly related to the rate at which energy drains from a freely discharging RLC circuit. The current amplitude decays as

$$I_0(t) = I_0(0)\,e^{-\Gamma t/2}, \qquad \Gamma = \frac{R}{L},$$

so the stored energy decays as

$$E(t) = \tfrac{1}{2}LI_0^2(t) = E_0\,e^{-\Gamma t} \implies \frac{dE}{dt} = -\Gamma E.$$

The number of radians of oscillation completed per energy e-folding time is

$$Q_f = \omega_0\,\frac{E}{|dE/dt|} = \frac{\omega_0}{\Gamma} = \frac{\omega_0 L}{R} = \frac{1}{\omega_0\tau},$$

consistent with the result above. A high Q_f therefore means the circuit loses a small fraction of its stored energy per oscillation cycle.

8.10 Power Input into a Driven RLC Series Circuit

March 12, 2026

The instantaneous power delivered to the circuit is $P(t) = V(t)I(t)$, where $V(t) = V_0\cos(\omega t)$ and $I(t) = I_0(\omega)\cos(\omega t + \phi(\omega))$. Time-averaging over one cycle gives

$$\langle P(\omega)\rangle = \frac{1}{T}\int_0^T V(t)\,I(t)\,dt = \frac{V_0 I_0(\omega)}{2}\cos\phi(\omega) = \frac{V_0^2}{2R}\cdot\frac{(\omega\tau)^2}{\left(1-\frac{\omega^2}{\omega_0^2}\right)^2 + (\omega\tau)^2}.$$

Substituting $x \equiv \omega/\omega_0$ and $Q_f = \omega_0 L/R = 1/(\omega_0\tau)$, this becomes

$$\langle P(x)\rangle = P_{\max}\cdot\frac{\frac{x^2}{Q_f^2}}{(1-x^2)^2 + \frac{x^2}{Q_f^2}}, \qquad P_{\max} \equiv \frac{V_0^2}{2R}.$$

The power curves are normalised by $P_{\max}$, which itself depends on R and hence on Q_f:

[4] Joule's heating law states that the heat produced in a conductor is proportional to the square of the current, the resistance, and the duration of flow.

- **High Q_f:** more power can be stored in the circuit, but only over a narrow range of driving frequencies.
- **Low Q_f:** less power is stored, but the circuit responds over a broader frequency range.

8.10.1 Steady State

A driven RLC circuit does not accumulate energy indefinitely. The power input from the driving source is balanced by the power dissipated in the resistor, leading to a stable steady-state energy level. While the inductor and capacitor continuously exchange energy, the resistor converts electrical energy to heat, preventing unlimited accumulation. In the idealised limit $R \to 0$, physical effects such as inductor saturation, capacitor breakdown, or wire melting would prevent infinite energy storage in practice.

8.10.2 Bandwidth and Quality Factor

Define the **bandwidth** $\Delta\omega = \omega_2 - \omega_1$ as the frequency interval between the two half-power points, i.e. the frequencies at which $\langle P \rangle = P_{\max}/2$. Then

$$Q_f = \frac{\omega_0}{\Delta\omega}.$$

This relation is a general property of resonators and is not specific to RLC circuits. In the context of radio receivers, the RLC circuit acts as a tuner: power delivered from incoming radio waves is maximised at the resonant frequency, while signals at other frequencies are suppressed. A high Q_f allows the receiver to distinguish closely spaced stations; a low Q_f gives a broader but less selective response.

9 Circuit Network Analysis

9.1 Kirchhoff's Laws (Review)

Definition 38 (Kirchhoff's Current Law (KCL))**.** *At any junction in a circuit, the sum of all currents entering equals the sum of all currents leaving.*

Definition 39 (Kirchhoff's Voltage Law (KVL))**.** *Around any closed loop in a circuit, the algebraic sum of all voltage changes equals zero.*

9.2 Terminology

Definition 40 (Node)**.** *Any point in a circuit where two or more components connect.*

Definition 41 (Junction (Principal Node))**.** *A point where three or more branches meet. All junctions are nodes, but not all nodes are junctions. Nodes describe*

general connectivity; junctions are the key locations for analysing current division.

Definition 42 (Branch)**.** *A single path connecting two nodes, containing one or more circuit elements in series.*

9.3 Methods of Analysis

Kirchhoff's laws are straightforward to state but require systematic application in complex circuits. Three standard methods exist.

9.3.1 Branch Method

A current variable is assigned to each branch; KCL is written for each junction and KVL for each independent loop. If there are n unknown branch currents and k junctions, this produces $k-1$ independent KCL equations and $n-k+1$ independent KVL equations. This is the most general method but typically yields the largest system of simultaneous equations, making it inefficient for complex networks.

9.3.2 Loop Current Method

A single circulating current is assigned to each independent loop. KVL is applied to each loop; KCL is automatically satisfied. This method is best suited to circuits with many series elements or voltage sources. It can only be applied to **planar circuits**[5].

9.3.3 Nodal Method

Voltage levels at each node are taken as the unknowns, with one node designated as the reference (ground). KCL is then applied at each non-reference node, expressing branch currents in terms of node voltages via Ohm's law (or its complex generalisation for AC circuits). The number of equations is reduced to the number of nodes minus one. This method is best suited to circuits with many parallel elements or current sources.

Method	Best suited for	Equations required
Branch	General circuits	n (largest system)
Loop	Many series elements / voltage sources	Independent loops only
Nodal	Many parallel elements / current sources	Nodes -1

March 17, 2026

9.4 Superposition Theorem

Theorem 2 (Superposition)**.** *In any circuit containing only linear elements, the current at any point is equal to the algebraic sum of the currents produced by each independent source acting alone. To find the contribution of a single voltage source, all other voltage sources are replaced by short circuits (plain wires) and all other current sources are replaced by open circuits.*

9.5 Current Sources

Just as a voltage source maintains a fixed potential difference regardless of the current drawn, a **current source** supplies a fixed current regardless of the voltage across it.

Definition 43 (Ideal Current Source)**.** *An ideal current source supplies a fixed current that is completely independent of the voltage across its terminals, corresponding to an internal resistance of $r = \infty$.*

Definition 44 (Real Current Source)**.** *A real current source has a finite internal resistance r, causing the delivered current to depend on the terminal voltage. It is modelled as an ideal current source in parallel with a resistance r.*

A current source can be realised in two ways:

- **Passive approximation:** Apply a voltage across a resistor whose resistance is much larger than the net resistance of the load to which the current is being supplied. The current through the load is then approximately constant at $I \approx V/r$.
- **Active implementation:** Use nonlinear active elements such as transistors to enforce a fixed current over a wide range of terminal voltages.

9.6 Converting Between Source Types

To create a constant voltage source from a constant current source, a component is placed in parallel that shunts (diverts) excess current while maintaining a fixed voltage drop. This requires the shunt resistance to satisfy $r \ll R_L$, so that the terminal voltage remains approximately constant regardless of the load.

9.7 Thévenin's Theorem

Theorem 3 (Thévenin's Theorem)**.** *Any combination of voltage sources, current sources, and resistances with two terminals A and B is electrically equivalent to an ideal voltage source e in series with a resistance r.*

[5] A planar circuit is one that can be drawn on a flat surface with no crossing wires. Non-planar circuits contain branches that cannot be laid out in a plane without intersections, and the loop method cannot be applied directly to them.

This theorem extends to circuits containing reactive elements (capacitors and inductors), in which case the equivalent circuit is an ideal AC voltage source in series with a complex impedance Z.

Since the Kirchhoff loop equations are linear, a linear relation must exist between the terminal voltage ΔV_{AB} and the current I_{AB} drawn at A and returned at B:

$$\Delta V_{AB} = e - I_{AB}\, r.$$

In analogy with a real battery, the constant e is the open-circuit voltage and r is the series resistance. The negative sign reflects the fact that drawing current increases the voltage drop across internal resistive elements, reducing ΔV_{AB}.

9.7.1 Determining e and r

Approach 1: Experimental (black-box circuit). Connect a variable load resistor R_L between terminals A and B and adjust it to vary I_{AB}. From the Thévenin relation,

$$I_{AB} = \frac{e}{r} - \frac{\Delta V_{AB}}{r}.$$

Alternatively, measure ΔV_{AB} as a function of R_L:

$$\Delta V_{AB} = e - r\,\frac{\Delta V_{AB}}{R_L} \implies \Delta V_{AB} = \frac{e\,R_L}{r + R_L} = \frac{e}{1 + \dfrac{r}{R_L}}.$$

Plotting ΔV_{AB} versus R_L allows both e and r to be extracted from a fit.

Approach 2: Theoretical (known circuit diagram).

- **Thévenin voltage** e: compute the open-circuit voltage between A and B with no current drawn ($I_{AB} = 0$).
- **Thévenin resistance** r: deactivate all independent sources (replace voltage sources with short circuits and current sources with open circuits), then compute the total resistance seen between terminals A and B.

9.8 Norton's Theorem

Theorem 4 (Norton's Theorem)**.** *Any combination of voltage sources, current sources, and resistances with two terminals A and B is electrically equivalent to an ideal current source i in parallel with a resistance r_N.*

9.8.1 Equivalence of Thévenin and Norton Representations

The two theorems are equivalent. Applying KCL at the output node of the Norton circuit,

$$i = I_{AB} + \frac{\Delta V_{AB}}{r_N} \implies \Delta V_{AB} = r_N\, i - r_N\, I_{AB}.$$

Identifying $e \equiv r_N\, i$ and $r \equiv r_N$ recovers the Thévenin relation $\Delta V_{AB} = e - r\, I_{AB}$. The conversion relations between the two representations are therefore

$$e = r_N\, i, \qquad r = r_N.$$

10 IDK where to put the info below

March 24, 2026

11 Appendix

11.1 Important Concepts

Basic Circuit Laws

- Ohm's Law: Figure 3
- Real battery: $V_{\text{terminal}} = V_0 - Ir$

The voltage supplied by the battery represents the total potential difference applied to the circuit.

Equivalent Components

- Resistors
  Series: $R_{\text{eq}} = R_1 + R_2 + \cdots + R_n$
  Parallel: $R_{\text{eq}} = \dfrac{1}{\frac{1}{R_1} + \frac{1}{R_2} + \cdots + \frac{1}{R_n}}$
- Capacitors
  Series: $C_{\text{eq}} = \dfrac{1}{\frac{1}{C_1} + \frac{1}{C_2} + \cdots + \frac{1}{C_n}}$
  Parallel: $C_{\text{eq}} = C_1 + C_2 + \cdots + C_n$
- Inductors
  Series: $L_{\text{eq}} = L_1 + L_2 + \cdots + L_n$
  Parallel: $L_{\text{eq}} = \dfrac{1}{\frac{1}{L_1} + \frac{1}{L_2} + \cdots + \frac{1}{L_n}}$

Capacitors

- Charge relation: $Q = CV$
- Capacitance: $C = \dfrac{\varepsilon A}{d}$
- Permittivity of free space: $\varepsilon_0 = 8.85 \times 10^{-12}\,\text{F/m}$

RC Circuits

(time constant $\tau = RC$)
Charging:

- Voltage: $V_C(t) = V\big(1 - e^{-t/\tau}\big)$
- Current: $i(t) = \dfrac{V}{R} e^{-t/\tau}$
- Charge: $Q(t) = CV\big(1 - e^{-t/\tau}\big)$

At $t = 0$, the capacitor behaves like a short circuit. As $t \to \infty$, it behaves like an open circuit.

Discharging:

- Voltage: $V_C(t) = V_0\, e^{-t/\tau}$
- Current: $I(t) = I_0\, e^{-t/\tau}$
- Charge: $Q(t) = Q_0\, e^{-t/\tau}$

Stored energy: $W = \dfrac{1}{2} CV^2$

Inductors

- Inductor voltage: $V = L\,\dfrac{dI}{dt}$
- Inductance (solenoid): $L = \dfrac{\mu N^2 A}{l}$
- Permeability of free space: $\mu_0 = 4\pi \times 10^{-7}\,\mathrm{T \cdot m/A}$

RL Circuits

(time constant $\tau = L/R$)
Charging:

- Voltage: $V_L(t) = V\, e^{-t/\tau}$
- Current: $i(t) = \dfrac{V}{R}\big(1 - e^{-t/\tau}\big)$

At $t = 0$, an inductor behaves like an open circuit. As $t \to \infty$, it behaves like a short circuit.

Discharging:

- Voltage: $V_L(t) = V_0\, e^{-t/\tau}$
- Current: $I(t) = I_0\, e^{-t/\tau}$

Stored energy: $W = \dfrac{1}{2} LI^2$

Energy Dissipation

- Resistor: $U = \int R\, I^2(t)\, dt$

RLC Circuits

- Natural frequency: $\omega_0 = \dfrac{1}{\sqrt{LC}}$
- Damping factor: $\Gamma = \dfrac{R}{L}$

AC Circuits

Complex current:

$$I = I_0\, e^{j(\omega t + \phi_0)} = \tilde{I}\, e^{j\omega t}.$$

Impedances:

- Resistor: $Z_R = R$
- Capacitor: $Z_C = \dfrac{1}{j\omega C}$
- Inductor: $Z_L = j\omega L$

Kirchhoff's Law:

Figure 4

Miscellaneous

Transient: The short initial response when a circuit is switched on, typically involving terms like $e^{-t/\tau}$.

Steady-state: The long-term behaviour of the circuit after transients vanish.

Filtering rules:

- *Low-pass filter*: Blocks high-frequency signals; allows low-frequency signals to pass. Often an RC circuit with output across the capacitor, or an LR circuit where the inductor appears first in the signal path.
- *High-pass filter*: Blocks low-frequency/DC signals; allows high-frequency signals to pass. Commonly an RC circuit with output across the resistor, or an LR circuit where the resistor precedes the inductor.

Water analogy:

- Resistor $\leftrightarrow$ friction; dissipates energy.
- Inductor $\leftrightarrow$ inertia; resists changes in current.
- Capacitor $\leftrightarrow$ spring; stores electrical energy.

Phase shifts (ICE vs ELI):

- In a capacitor, current leads voltage (ICE).
- In an inductor, voltage leads current (ELI).

Damping cases in an RLC circuit:

- *Underdamped*: Oscillatory behaviour before settling.
- *Overdamped*: No oscillations; system slowly approaches equilibrium.
- *Critically damped*: Fastest return to equilibrium without oscillations.

Integrator: Circuit where the output is proportional to the integral of the input; associated with $\frac{1}{j\omega}$.

Differentiator: Circuit where the output corresponds to the rate of change of the input; associated with $j\omega$.

Complex impedance Z: Treat impedance like resistance when solving AC circuits using $V = IZ$.

Decibels (dB) for Bode plots:

$$\text{Gain (dB)} = 20\log_{10}\left(\frac{V_{\text{out}}}{V_{\text{in}}}\right).$$

$-3\,\text{dB}$ point: The cutoff where the signal power is reduced by half.

Cutoff frequency ω_c:

- RC circuit: $\omega_c = \dfrac{1}{RC}$
- LR circuit: $\omega_c = \dfrac{R}{L}$

Tip: For sinusoidal inputs, replace L and C with their impedance expressions and analyze the circuit using standard algebra instead of solving differential equations.

12 Useful Links

Inductors (visual explanation): https://www.youtube.com/shorts/lXk4CQDbr4Q
Capacitors (visual explanation): https://www.youtube.com/shorts/PYrTLQctdwg
Resistors (introduction): https://www.youtube.com/watch?v=5HI33hSZoH4
Drawing Circuits for latex: https://www.circuit2tikz.tf.fau.de/designer/